ASHRAE Applied Engineering Challenge, 2014

Improving Indoor Air Quality System

California Polytechnic State University, San Luis Obispo
Department of Mechanical Engineering, HVAC & R, Concentration

Installation Manual

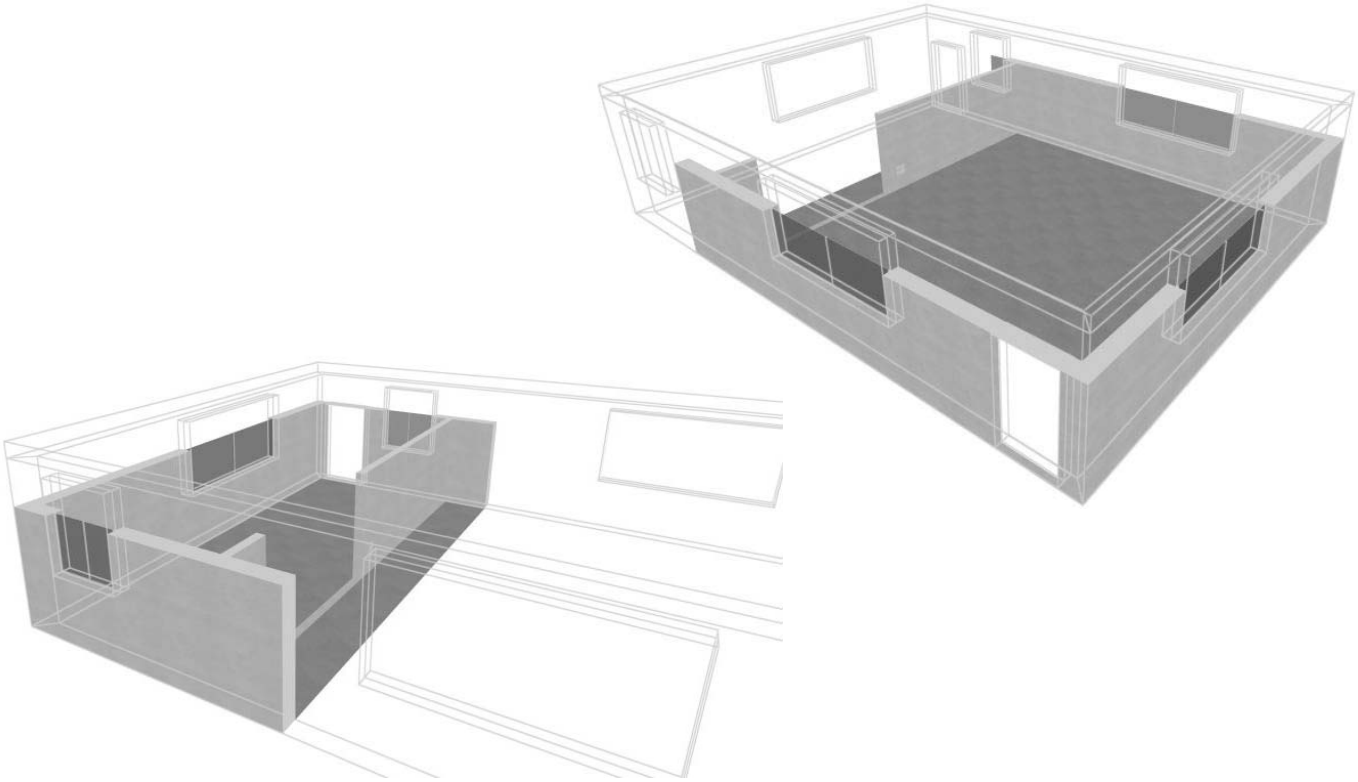

Table of Contents

Heating System Installation Manual 2

Chimney and wood stove 2

Direct Intake 4

Maintenance 4

Cooling System Installation Manual 6

Air Conditioner 6

- Window requirements satisfied 6
- Window requirements not satisfied 6

Gasoline generator 7

Maintenance 7

Venitlation System Installation Manual 9

Window Fan w/ Air Filters 9

- Air Filter requirements satisfied 9
- Air Filter requirements not satisfied 9

Airtight Sealing (caulking) 10

Maintenance 11

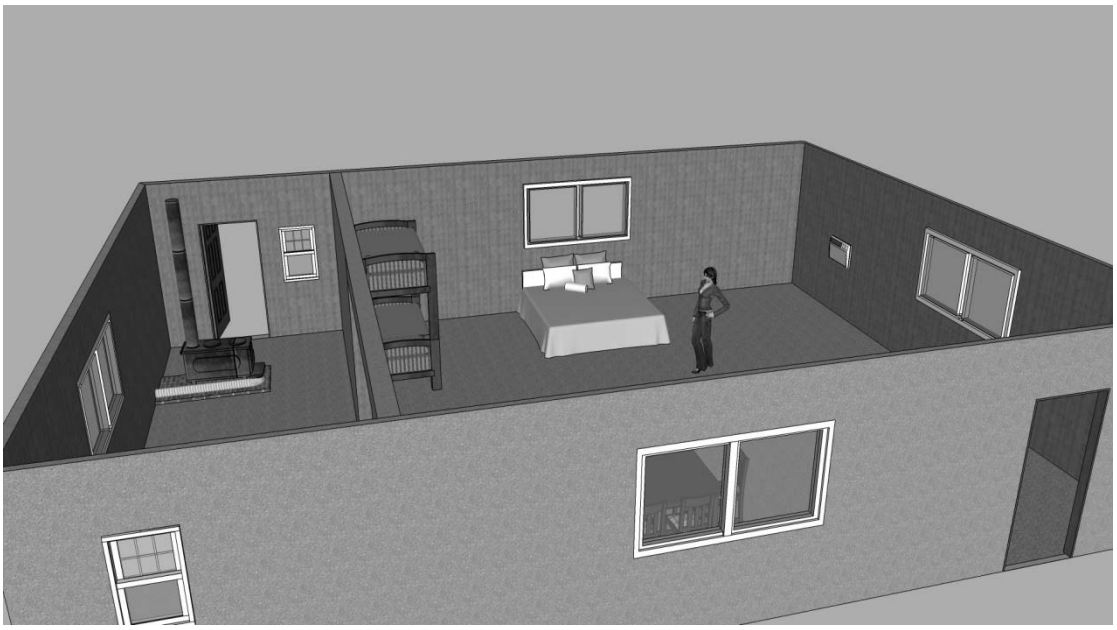

3D model rendering

~Heating System Installation Manual~

Chimney and wood stove:

- Tools
  - Bucket
  - Steel rod
    (for mixing the mortar)
  - Tape measurer
  - Heat resistant gloves
  - Safety glasses
  - Electric drill w/ bits
  - Screwdriver
  - Hammer
  - Hole saw
    (hole in ceiling should have 2” clearance from duct for safety)
  - Hi-temp silicone to seal joints
    (furnace cement)
  - Level
  - Smoke detector

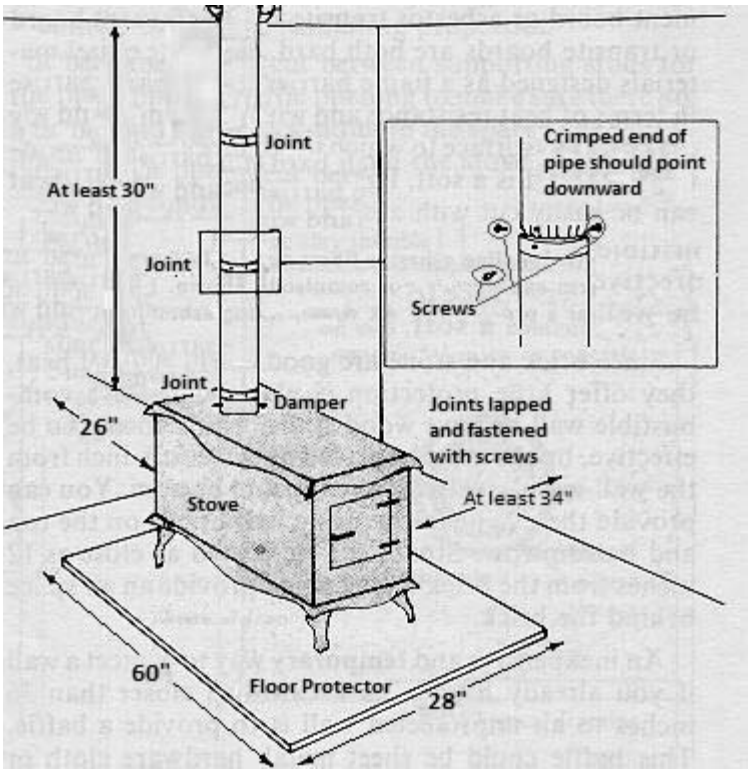

Figure 1: Wood stove instillation details

- Materials
  - Stove
  - 9 self-tapping screws
    (3 for each duct joint)
  - (3) 6” 24 gage steel duct [height 4’] (total length 12’)
  - Floor protector made of brick min. 60”x 28”
    - Brick size is h= 2”, w= 4”, and l= 8” (standard red concrete dimensions)
    - Approximately about 56 bricks
    - (2) 80lb bags of mortar mix to fill in the gaps between the bricks
  - 6” steel vent cap (chimney cap)
  - 6” steel flashing
  - 6” steel storm collar

- Procedure
  - Wear safety glasses at all times
  - Build floor protector to spec, in desired location in kitchen
    - 34" from side wall, 26" from back wall, 30" from ceiling (minimum)
    - Follow instructions on bag of mortar mix on how properly mix with water in a bucket
  - Follow owner’s manual on how to break in the stove before using it in the home
    - It is very important that the stove is start up correctly because the stove has a chemical surface layer for protection. These chemicals need to be removed

properly so that when stove is used, people don't inhale fumes of toxic chemicals.

- Set stove on top of floor protector
- drill/saw a hole of 8" diameter on roof using hole saw and drill
  - 10" hole needed for safety code requirement (pipe needs to be 2" away from nearest surface)
- Assembling (3) 4' long 6" stove pipe
  - Assemble on ground and not on roof
  - Apply hi-temp silicone around outer male and inner female connection of ducts
  - Connect the three 4' long 6" stove pipes
  - Use leveler to make sure it is straight before tapping the screws to the joints
  - Use self-tapping screws (read next point before moving forward)
    - Use 3 self-tapping screws for each joint and by code there should be three at each joint connection evenly separated around ductwork when installing
- Go up to roof with assembled 12'long pipe
- Slide connected duct through hole in the roof
  - Will be easier with assistance of one other individual
  - Apply Hi-temp silicone around outer male and inner female connection of duct and stove
  - Connect duct to stove flue collar
  - Use leveler so that it is straight
  - Use screws to secure the connection on flue collar
  - Go up roof with flashing, vent cap, storm collar, Hi-temp silicone, and screwdriver
- Apply Hi-temp silicone on bottom of flashing and slide flashing down duct onto roof
- Slide storm collar down duct and should be snug with top of flashing
- Connect vent cap above flashing and tighten screw on pipe clamp
- Install magnetic stove thermostat [11] on side or top of stove, where it can be seen (stove should be operating at 400-600ºF for optimal use and safety purposes)
- Finish by installing a smoke detector in kitchen for safety

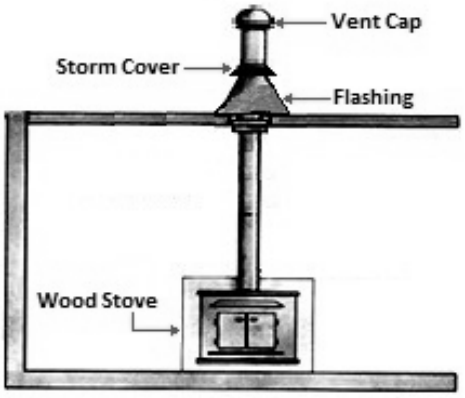

Figure 2: Flashing, storm cover, and vent cap

Families who install the chimney and stove system themselves save approximately $455; all the tools bought and used can be kept for reuse. With that said the residents of the home who installed the chimney can turn their experience to help neighbors.

Direct Intake:

- Tools
  - Philips screwdriver
  - Tape measurer
  - Heat resistant gloves
  - Safety glasses
  - Hole saw
- Materials
  - 4” flexible aluminum duct of 8’ in length
  - 4" Round Duct Black Wall Cap w/ Damper
  - 4” rubber cap (free; can be ordered as a sample [12])
- Procedure
  - Use hole saw to make a 4” hole in a wall close to the stove
    - Hole should be at least 2’ from the ground
  - Install 4" Round Duct Black Wall Cap w/ Damper
    - Make sure that the square surface is on the outer wall
    - Round end is inserted into wall hole
  - Insert the flexible duct to the 4” round duct cap from inside the house
    - Tighten round clamps with screwdriver to keep cap and flex duct secured
  - Route the free end of the flex duct in front of the draft control knob and the sliding draft plate on stove

Maintenance [13]:

- Surface temperature
  - A safe surface temperature is between 400-600°F
    - Wood size has to be sized right and specification on wood size are in the stove manual
    - How to start the fires are also in the manual
- Ash clean up
  - Ashes should be cleaned up weekly but there should be a 1” of ash left inside for better heating performances
- Duct cleaning [should be done every 2 years]
  (It should be done every 4 years, but seeing that the stove will be used frequently, the amount of soot that will accumulate would cause unsafe cooking and heating conditions that can lead to heavy exhaust smoke, bad indoor air quality, and fire; so it should be done every 2 years instead of 4)
  - Tools
    - 6-Inch Poly Chimney Cleaning Brush
    - 12’ extension kit
    - Safety glasses (wear at all times)
    - Screwdriver
  - Procedure
    - Close stove damper fully

- Go on the roof with tools
- Remove vent cap by loosening the screw on the clamp with the screwdriver
- Attach the brush to extension
- Start inserting the brush in the chimney duct and proceed by directing the brush all the way down the chimney
    - Worker will need to add extensions if the brush is not at the desired distance down the chimney
    - Make sure not to go too far down (damage to the stove damper may occur)
- Move brush up and down to fully clean the duct inner walls
- Attach vent cap to chimney duct
- Empty out debris in the stove from chimney by opening stove damper
- Dispose of debris properly
- Make sure to store cleaning tools in a bag, to keep home environment clean

Figure 3: 3D rendering of fully installed stove in kitchen

~ Cooling System Installation Manual ~

Air Conditioner:

- Window requirements satisfied
  (If window is between a minimum opening of 22” width by 15.5” height, and a maximum opening of 36”width by 15.5” height, then window requirements are satisfied)
  - Tools
    - Philips screwdriver
    - Flathead screwdriver
    - Pencil
    - Tape measurer
    - Level
    - Scissor
  - Procedure
    - Follow instructions on instillation manual to install AC unit properly

Figure 4: Window air conditioner unit

- Window requirements not satisfied
  (If window requirements are not satisfied then the following steps will help with proper instillation of AC unit)
  - Tools
    - Philips screwdriver
    - Flathead screwdriver
    - Pencil
    - Tape measurer
    - Level
    - Scissor
    - Hole saw
    - Saw
    - Hammer
  - Procedure
    - Pick wall furthest from kitchen with outlet near
      (These homes have 2 outlets in kitchen and 4 outlets in living room; wiring to outlets can be spotted throughout the home, since wiring is externally located)
    - Mark dimensions (22” width by 15.5” height) on wall with pencil
      - Should be at least 3.5 feet from the floor
      - Use level to make sure everything is straight
    - Use hole saw to make holes in wall as seen in Figure 5
    - Use saw to cut any excess wall, to make way for proper AC unit fitment
    - Once proper clearance has been achieved, follow instructions on installation manual
      - Treat hole as if it is a window opening

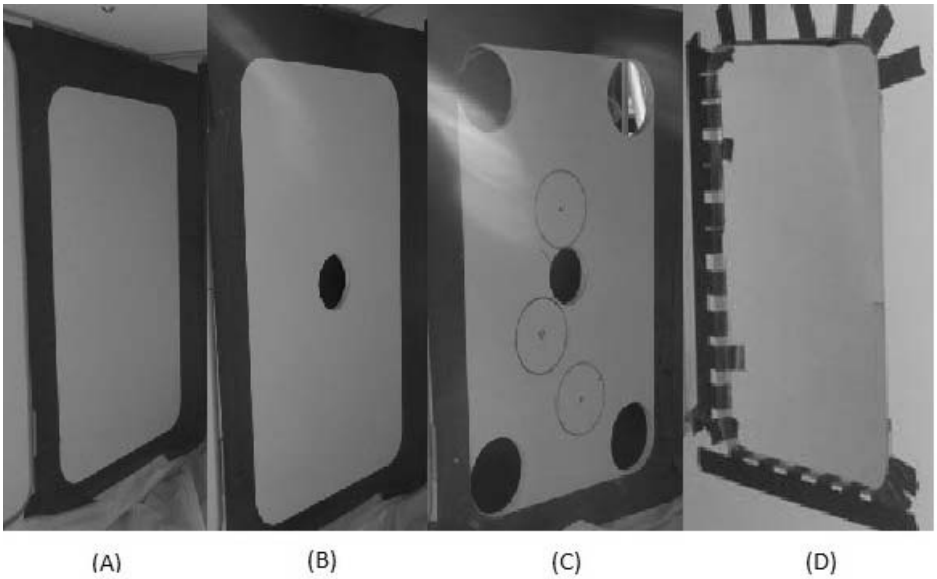

Figure 5: General procedure of how to make a square cut out with hole saw and saw; (A) outlined cut out area; (B) & (C) holes are cut made to make it easier to use saw to cut square area; (D) finished square area for AC unit

Gasoline generator:

- Tools
  - None
- Materials
  - Gasoline generator
  - 100' outdoor electrical extension
    - Used to connect AC plug to generator outlet located outside
- Procedure
  - When using generator
    - Locate outdoors away from any open windows, and away from AC unit
  - When not in use
    - Store indoors

Maintenance:

- Air conditioner
  - Follow owner's manual for proper maintenance

- Generator
  - Follow owner's manual for proper maintenance and storage

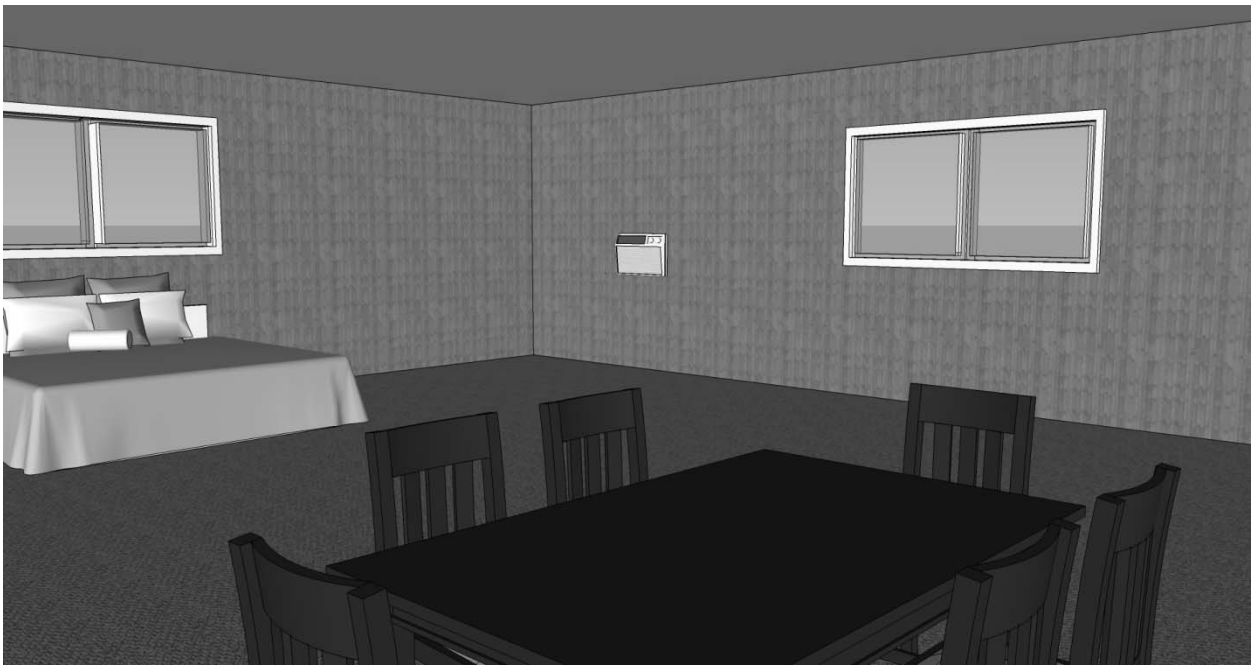

Figure 6: 3D rendering of AC unit in living room

~Ventilation Instillation Manual~

Window Fan w/ Air Filters:

- Materials
  - Window fan (box fan)
  - Furnace Air filter
  - Web absorber filter

- Air Filter requirements satisfied
  (If window fan and filter are same height, and fit window opening, then requirements are satisfied)
  - Tools
    - Pencil
    - Tape measurer
    - Level
    - Packaging tape
    - Scissor
  - Procedure [14]
    - Measure window opening to make air filter can fit.
    - Cut each side of filter evenly without cutting filter media in middle. This be folded back in and taped closed (Figure 7)
    - Repeat process for the web absorber filter
    - Combine both filters and tape perimeter to make it water tight
    - Place finished filter in window opening to make sure it fit securely against top edge of window (Figure 8)
    - Position window fan on sill and secure to opening in front of finished filter
    - Make sure all gaps are closed (Figure. 9)

Figure 7: Both air filter and web absorber filter combined and taped sealed.

Figure 8: Finished filter combination in position on window sill.

Figure 9: Final configuration of homemade window fan filter system.

- Air Filter requirements not satisfied
  (i.e. if window fan or filter cannot be fitted in window opening, then the following steps will help with proper instillation of the window fan)
  - Tools
    - See *Window Air Conditioner* for necessary tools
  - Procedure
    - Follow requirements not satisfied procedure for *Window Air Conditioner* to dimensions of your window fan
    - Once hole is made, follow original *Window fan w/ Air Filters* procedure

Airtight Sealing (caulking):

- Tools
  - Caulk gun
  - Incense stick
  - Matches
  - Retractable utility knife
- Materials
  - Silicone caulk containers (x60)
  - Dish soap
  - Cloth/Rag
  - Foam weather stripping (optional)
- Procedure
  - Begin with window sills by cleaning dust of edges for best adhesive contact.
    - Use dish soap and moist cloth
  - Insert silicone caulk into caulk-gun
    - Depending on type of gun, lock into place
  - Locate cracks and penetration areas by lighting the incense and observe movement of the smoke for unwanted airflow
  - Once area is located, hold gun tip to location at 45°, and then slowly apply caulk to produce a seam the width of an index finger (Figure. 10 & 11)
  - Repeat process for all window openings, wall-floor joints, wall-ceiling joints, roof flashings and any other location found using the incense
    - For better results, apply multiple layers
  - To further increase air tightness, apply foam weather stripping around the perimeter of exterior doors
    - Use utility knife to cut strips to proper length
      - For hard to reach corners, use a straw
  - Once complete, let sealant sit and dry for 24 hours

Figure 10: Applying silicone caulk sealant to areas of air leakage.

Figure 11: Cleaning up seam of silicone caulk.

Maintenance:

- Window Fan with filter
  - Replace air filter every 6-8 weeks to maintain fan power and life of the motor.
  - Clean the outside of vents periodically with a brush or moist cloth
    - If necessary, wipe down motor as well
    - For more information, refer to window fan owner's manual

- Airtight Sealing
  - If properly installed at the beginning, maintenance should be minimal
  - Consider reapplying if one or more conditions occur:
    - Bead of sealant begins to shrink
    - Caulk begins to loosen off surface
    - Caulk begins to crack
    - Dust begins to form on seam

Reference Sheet

[1] "Urban Air Pollution." *Dashboard*.com. Lschmidt1850, 2 Dec. 2010. Web. 12 Feb. 2014. <"https://confluence.furman.edu/display/GGY230F10/Urban+Air+Pollution>.

[2] Lee, Carrie M., CHelsea Chandler, Michael Lazarus, and Francis X. Johnson. "Assessing the Climate Impacts of Cookstove Projects: Issues in Emissions Accounting." Stockholm Environment Institute, n.d. Web. 8 Feb. 2014. <http://www.goldstandard.org/wp-content/uploads/2013/02/SEI-WP-2013-01-Cookstoves-Carbon-Markets.pdf>.

[3] Iván Nelinho Pérez Maldonado, Lucia Guadalupe Pruneda Álvarez, Fernando Díaz-Barriga, Lilia Elisa Batres Esquivel, Francisco Javier Pérez Vázquez and Rebeca Isabel Martínez Salinas (2011). Indoor Air Pollution in Mexico, The Impact of Air Pollution on Health, Economy, Environment and Agricultural Sources, Dr. Mohamed Khallaf (Ed.), ISBN: 978-953-307-528-0, InTech, Available from: http://www.intechopen.com/books/the-impact-of-air-pollution-on-health-economy-environment-and-agricultural-sources/indoor-air-pollution-in-mexico

[4] "Home Depot." Home Depot. N.p., n.d. Web. 5 Apr. 2014. <http://www.homedepot.com.mx/comprar/es/iztapalapa/home>.

[5] "Avarage Salary in Mexico City." *Redirecting*. N.p., n.d. Web. 24 Feb. 2014. <http://www.worldsalaries.org/mexico.shtml>.

[6] "Test Results of Cook Stove Performance." Aprovecho Research Center Shell Foundation United States Environmental Protection Agency, n.d. Web. 5 Feb. 2014. <http://my.ewb-usa.org/theme/library/myewb-usa/project-resources/technical/TestResultsCookstovePerformance.pdf>.

[7] "WeatherSpark Beta." *Average Weather For Mexico City*. N.p., n.d. Web. 12 Jan. 2014. <http://weatherspark.com/averages/32574/Mexico-City-Distrito-Federal>.

[8] ASHRAE, *ANSI/ASHRAE Standard 55-2013. Thermal Environmental Conditions for Human Occupancy*. 2010, American Society of Heating, Refrigerating, and Air-Conditioning Engineers, Inc.

[9]ASHRAE, *ANSI/ASHRAE Standard 62.1-2013. Ventilation for Acceptable Indoor Air Quality in Low-Rise Residential Buildings*. 2013, American Society of Heating, Refrigerating, and Air-Conditioning Engineers, Inc.

[10] "Build Equinox | Solutions for a Healthy, Comfortable, and Sustainable Lifestyle." *Build Equinox RSS2*. N.p., n.d. Web. 11 Feb. 2014. <http://buildequinox.com/>.

[11] Magnetic Stove Thermostat. *Amazon.com*. N.p., n.d. Web. 24 Mar. 2014.

[12] 4" round Cap. N.p., n.d. Web. 24 Mar. 2014. <http://www.stockcap.com/>.

[13] "Cleaning and Maintenance." *JOTUL*. N.p., n.d. Web. 28 Mar. 2014. <http://jotul.com/uk/guides/cleaning-and-maintenance>.

[14] "DYI Twin Window Fan Air Filter." *DYI Twin Window Fan Air Filter*. AIR-PURIFIER-POWER, n.d. Web. 25 Mar. 2014.